Ryte Data
Dedicated to 99/4A and 9900 Computer Systems
Ver 15
1986
SEPTEMBER
210 MOUNTAIN STREET
HALIBURTON, ONTARIO K0M 1S0
CANADA

R/D COMPUTING NEWSLETTER

VIDEO UPGRADE II

by Steve Schmitt

I find fuzzy characters to be very distracting and have found a way to greatly improve the quality of the video signal and even add RGB capabilities to the TI99.

The TI99 was designed to use two different video processors, the TMS9918A or the TMS9928A. Both chips are identical except for the video output. The TMS9918A has a composite video output while the TMS9928 has three color difference outputs. While color difference outputs normally cannot be connected to a monitor, I have seen monitors for sale at very low prices ($120 for a 19" set), but even more interesting is that high quality monochrome sets are available in the range of $15 to $50.

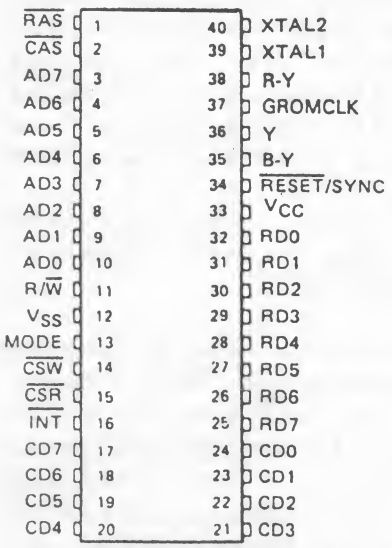

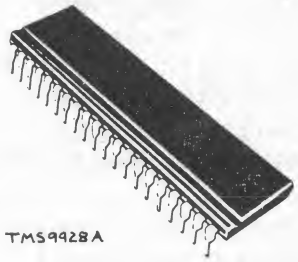

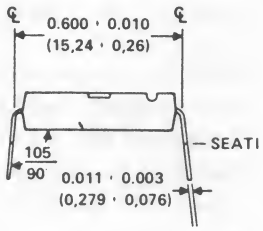

One of the outputs of the TMS9928 is the luminescence signal which is just a fancy name for a black and white composite video signal. When the TMS9928 is substituted for the TMS9918A, the console becomes a monochrome computer with a bandwidth of about 15MHZ. This gives excellent resolution with low cost green screen

****
* TI 99/4 SECRETS AND CURIOSITIES *
>>>>>>>>>>by Bill Gronos>>>>>>>>>>
****

BRUSH THE COBWEBS OFF YOUR CASSETTE PORT AND SEE SOUND IN SIXTEEN COLORS

This month I've got a program that is going to make your eyes pop. It's the closest thing to an LSD trip that your 99/4 can produce.

If you read my previous article, you'll remember that I gave you three simple assembly language programs to take music input through the cassette port and display it graphically on the screen. Travis Holland in Austin, Texas writes, "Widgeon has been playing his Spike Jones tapes with #1, and is ready for different colors for different frequencies". I think Widgeon is going to be very pleased after he types in this month's two programs - Unless he happens to be epileptic. If he is, you'd better have a stick handy, Travis, to put in his mouth when he runs the second program.

The second program is so fantastic it makes me want to add my computer and video monitor to my sound system as a permanent fixture. If you were fortunate enough to start out with a disk drive (unlike myself who labored

goto 7

sets. Even with color or B W TV's the picture quality is improved as there are no color signals present to distort the output. On my green screen set (which is the guts out of an old TI terminal), I can see every pixel and text is very sharp - as the monitor was intended for 80 column use.
For those who want high resolution color, a fairly simple converter can be made by adding three op amps to produce RGB or with an LM1889 a color composite video signal can be generated. I am working on a small circuit board which will be switchable between the black and white output or a color output. I have the TI application sheet for the TMS9928A and it shows the circuits needed to generate the various outputs. I would like to share this information with anyone who wants to interface their TI99 to an RGB monitor.

Installing the TMS9928 is about as simple any any hardware project can be. The TI99 console was designed for simple assembly or disassembly to keep manufacturing costs low - which makes the job easier. Also, the video processor is in a socket so no rework is needed on the main board. Simply disassemble the console and swap the two video processors: being sure to get the notch on the chip in the correct orientation. Spread a little heat sink compound on the top surface of the chip. The correct pins on the chip are already wired to the video connector, so the modulator will still operate correctly. Any monitor cable can be used to connect it to a monochrome set.

The only hard part of this project is finding a source of the TMS9928A. In one year of searching I have found only one source and they are a wholesaler with a minimum order of 20 parts. I am now the proud owner of 19 extra video processors. I will supply this part along with an LM1889 and instructions for $12.00.

If you have two consoles, it is well worth modifying one for text work and using the other for games. In fact, I find that many games are better in monochrome because I can see the smaller details.

Texas Instruments clearly states that the TMS9918 gives color distortion which cannot be corrected by using external circuits. Only the TMS9928 will give distortion free RGB. To illustrate the color distortion the following program will put vertical bars on the screen:

```
10 CALL CLEAR
20 CALL CHAR(32,RPT$("A",16))
30 GOTO 30
```

The result will be anything but vertical bars. Now swap the TMS9928 for the TMS9918 and repeat the experiment. With a monochrome monitor the vertical bars will be very clear and even on color sets the bars will be visible (no color of course because only the Y signal is used in a simple swap).

1. For monochrome use ONLY, just replace the TMS9918A with the TMS9928A. No other changes are needed.
2. For color output refer to the TI99/4A video circuit. Pins 2 and 5 of J201 are normally connected to ground via jumper W202 & W204. Remove jumpers W202 & W204 and install jumpers W201 & W203. Resistors R210 & R211 must be installed.

After these modifications pins 2 and 5 of J201 will no longer be grounded and the video modulator cannot be used. Pin 2 is used as the ground return for the +12V and pin 5 is the shield ground. A new cable must be made as al patch cables will use pins 2 & 5 as ground. Radio Shack sell the 5 pin DIM plugs.
Use the outside shell for all the shield grounds. Use either shielded cable or twisted pairs.

Drawing 1 is a circuit that I used to generate both monochrome and color composite video. R2 controls the color level; when turned all the way of only the Y signal output is generated for monochrome. For color, R2 is turned up until a reasonable color level is obtained. R1 sets the D.C. level of the R - Y and B - Y inputs. No D.C. restoration ciruits are needed.
This circuit uses +12V & -5V and can be driven by a Coleco power supply available from Radio Shack or American Design Components. The LM318 is

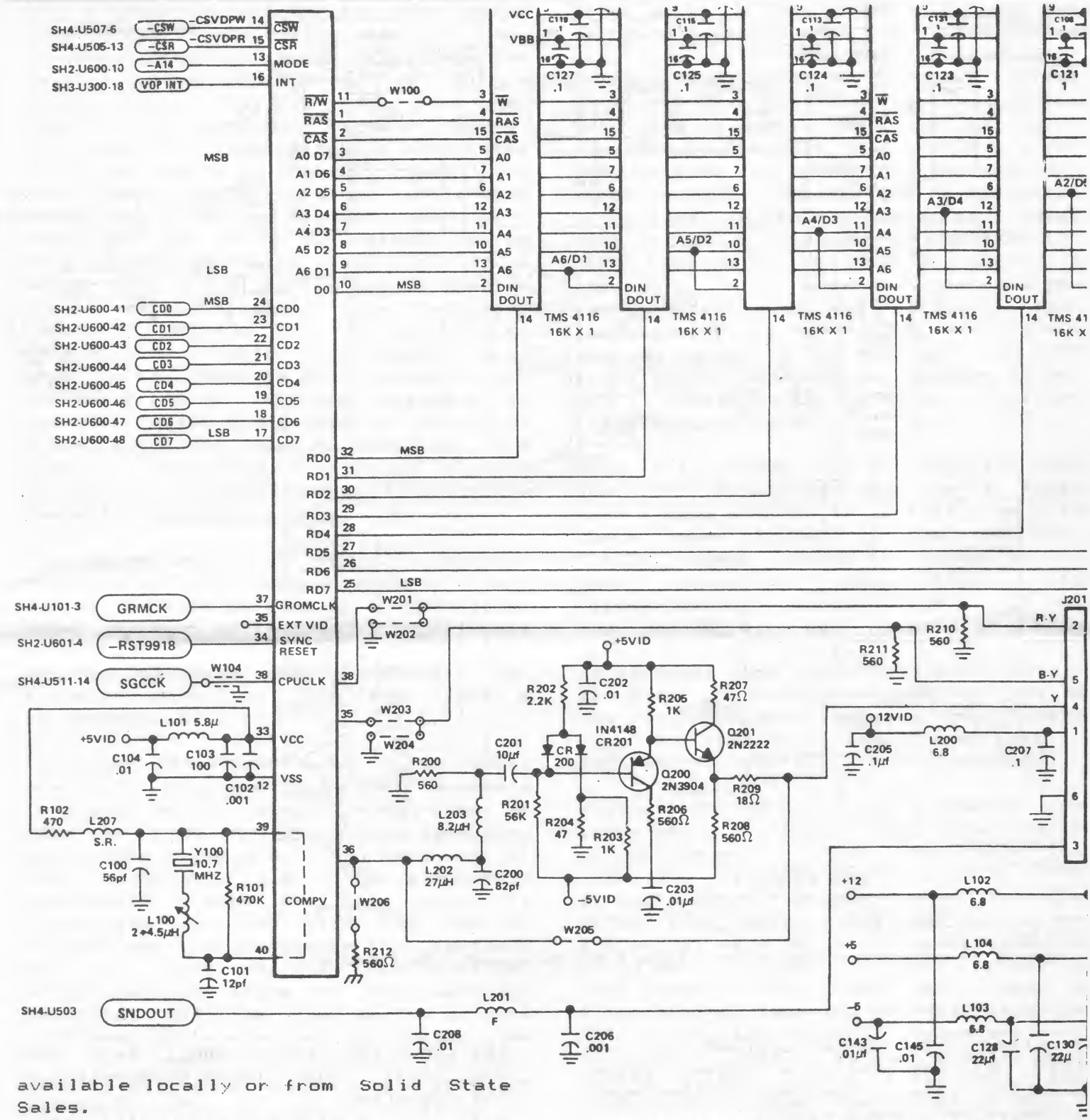

available locally or from Solid State Sales.

One disadvantage of the circuit in Drawing 1 is that the LM1889 produces a short color burst which may cause problems on some color sets. Another problem is that the chroma oscillator is not in sync with the pixel clock. This will cause the normal rainbows at the edges of shapes to ripple. This may be very distracting if the two clocks are near the same frequency.

Drawing #2 shows a circuit which replaces the chroma oscillator with a phase-locked loop using the GROM clock. Refer to the TI99/4A video circuit. This must be brought out on pin 1 of J201. Cut the trace on the circuit board and add a patch wire from pin 37. The circuit of drawing 2 will give

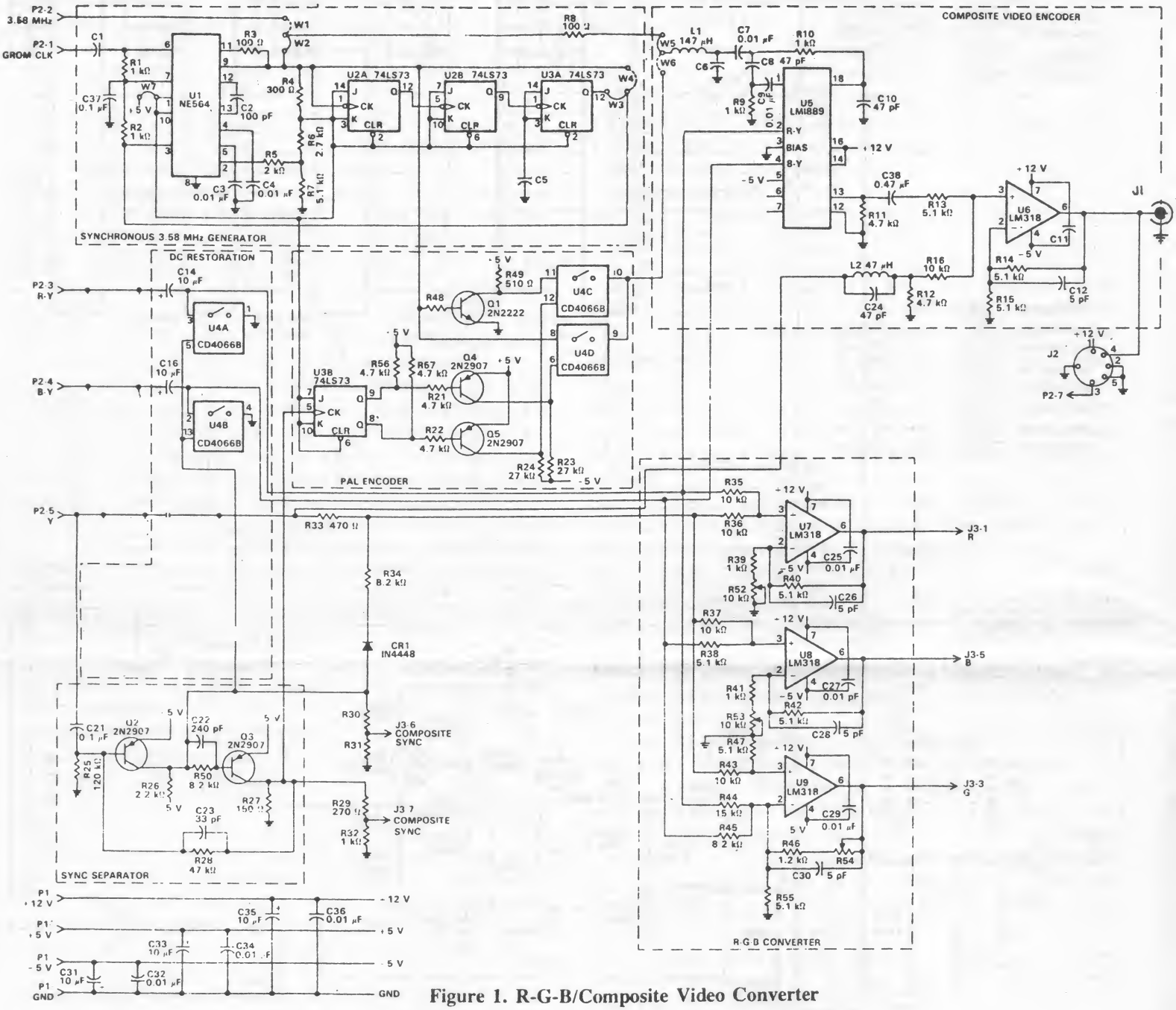

Figure 1. R-G-B/Composite Video Converter

excellent color and monochrome. I use this circuit with a Roland color monitor. The black and white mode produces very sharp text.

The RGB conversion circuit is more complex. This is taken from TI's application notes. It should be easy to build with no frequency dependent circuits (no tanks, filters etc.). Note that the TI99 already has a DC restorration circuit on the Y output. Keep the cable between the console and the converter circuit short (less than one foot). There is no termination at the converter.

Also J3-7 is probably mislabeled and is really the vertical synch.

Please keep in mind that these circuits are experimental. Use them with that in mind.

If you have any more questions feel free to contact me:

Steven Schmitt, 2306 10th Ave. N.W., Rochester, MN 55901.

with a cassette recorder for what seemed like forever), you really need to come up with a cassette cable just to see the amazing things your 99/4 can do with a sound input. If you don't have one, check in the computer bargain papers! I've seen TI cassette cables advertised for $1.50, which is probably less than what the connectors alone would cost you. It's also easy to make your own. Then you can stick on whatever mating plug your music device requires. Just about any sound device can be used to provide an audio input: tape recorder, radio, TV, Walkman, etc. If you wish to make your own cable, the audio input pins on the cassette port connector are numbers 8 and 9. On the standard TI cassette cable, pin 8 goes to the tip of a mini plug, and pin 9 goes to it's sleeve. This plug is inserted into the earphone or external speaker jack on the cassette recorder.

The sound modulated graphics display produced by the second program could easily be used as part of a disco light show. It kept me fascinated for hours as I played different songs and marveled at the patterns they produced. But there's more to this than just a psychedelic gimmick.

The point to be made with these sound analysis programs is that assembly language, being nothing more than an easy to read form of machine language, works very close with the hardware of your computer, i.e. the electronic components. Some of the work is simplified for you with the use of subroutines that handshake the hardware for you, such as the KSCAN routine, which reads the state of the keyboard contacts, and the disk device service routines, which are used to access the the disk reading mechanisms. You don't have to use KSCAN to input data from the keyboard; you can go directly to the pins of the keyboard driver chip and decode the key states yourself. I did this in program number three in my last article with the assembly language instruction TB 7, which senses the presence or absence of voltage on pin 34 of the TMS9901 semiconductor chip, which in turn is tied to the contacts of the switch that lies underneath the FCTN key on the keyboard.

It's quite a bit trickier to read the keyboard contacts than the audio input pin. Normally there is no reason to do this anyway, as the KSCAN routine provides most of the keyboard reading functions we need. Most, but not all. How many points have you lost in a video game because the ALPHA LOCK key was on, knocking out some of the the joystick directions? You have probably seen games that flash a warning to check if the ALPHA LOCK is on, but that is simply a reminder. With assembly language you can go directly to the hardware, test the state of the ALPHA LOCK, and blare a warning tone with the message, "RELEASE ALPHA LOCK KEY NOW!". As soon as the key is released, the program continues its execution.

Does this ALPHA LOCK key business make your mouth drool? How come you've never seen a game written by TI that uses this check, even though it requires very little memory space? The answer to the last question is that the Editor/Assembler manual doesn't tell you how to do it, and most of TI's programmers didn't have an understanding of hardware that would let them figure it out. There's a modicum of truth in the joke: How many computer programmers does it take to change a light bulb? - THEY CAN'T! THAT'S A HARDWARE PROBLEM!

I'll willing to bet there's someone out there who's thinking: "That doesn't seem so hard to me. If you can check the FCTN key with the instruction TB 7, TB 21 ought to do the same thing for the ALPHA LOCK key, since page 409 in the E/A manual says CRU bit 21 is the 'ALPHA LOCK ON TI-99/4A' ". Sorry to say it just doesn't work that way. When I first started learning assembly language I tried it, and couldn't understand why it didn't work. It wasn't until many months later when I first saw the schematic diagram for the 99/4A that I finally figured it out. I leave it as a challenge for those of you who have the schematics to figure this one out.

Unlike the ALPHA LOCK check, reading the audio input pin is a particle of pastry, as you saw in the simplicity of last article's programs. Whenever a sound is applied through the cassette port, pin 30 of the TMS9901 chip modulates in a

manner analagous to a plucked guitar string. But instead of a physical vibration there is an electrical vibration. This electrical vibration represents the frequency of the applied sound. As received on pin 30 of the TMS9901, a sound wave will be a periodic bit string such as:

LOW FREQUENCY SOUND
11111111000000001111111100000000

HIGH FREQUENCY SOUND
11001100110011001100110011001100

These were the types of patterns produced on the monitor screen by last article's programs. They were interesting (at least to me they were, but perhaps I'm a bit strange), but not very dramatic. All that needed to be done was to add some "whistles and bells". This is what has been done with the following two programs.

Comparing the number of instructions in last article's programs and the current ones, you can see that whistles and bells are a case of the tail wagging the dog; they take up the majority of the program space. I wanted to give you lots of nifty features, but at the same time not burden you with the laborious task of entering hundreds of lines of coding. I had to compromise between program length and features - and that was difficult to do, because a lot can be done with the sound input routine.

This program length quandry has plagued me since I first began writing assembly language articles. It makes me feel bad when I see a copy of the final product that has already been distributed world wide, and there are typographic mistakes in the program coding. I feel bad because I know there are people who will type in the program, find it doesn't run, and spend hours checking to see if they made a mistake. Perhaps Ryte Data should set up a telephonic bulletin board service so readers could call and down load the correct files. I'm sending in this article on disk so that it won't have to be retyped. Perhaps this will lower the error rate.

FIRST PROGRAM: FREQUENCY ANALYSIS

The first program is a frequency analyzer that displays sound as a twenty channel bar graph with a display that looks similar to:

```
5000CS RRRR
       OOOOO
       YYYYYY
       GGGGGGG
1000CS BBBBBBBB
       IIIIIIIII
       VVVVVVVVVV
       GGGGGGGGGGG
       WWWWWWWWWWW
 500CS RRRRRRRRRRRR
```

Different frequencies light up different color bars. The frequency headings are approximate. I calibrated my program with a stero system test tape that produced tones from 30 to 15000 cycles per second. I wish I would have had a laboratory tone generator to accurately test the entire frequency response.

SECOND PROGRAM: PSYCHEDELIC LIGHT SHOW

This is not an entire program, but a segment to replace the graphics display section in the first program. It produces a set of concentric colored squares that modulate with the sound input. The effect is galvanizing. Recommended sound inputs for maximum effect: Bach's "Toccata and Fugue", Iron Butterfly's "In A Gadda Da Vida", Meat Loaf's "Bat Out of Hell".

My amiga, Felisa, had a difference of opinion on the best display delay; she prefers a slower sampling rate, especialy when you are listening to slower music. I use a delay of hex 200, but Felisa suggests hex 500. Try a delay of 1 and the screen will break up into shimmering pieces.

To change program one into the psychedelic light show, delete all the lines from "*SUBROUTINE TO DRAW COLOR WEDGE" to the end of the program. Then add the coding lines from program two in their place.

To change the display delay, count down three lines after the "*DRAW SQUARES" line in program segment two. This line reads: "LI Ø,>2ØØ". To slow down the screen display increase it from 2ØØ to 5ØØ, or even higher if you like.

I would like to write more about these programs, but Bruce Ryan may want to put something in this newsletter besides my mutterings. Comments can be sent directly to me at either of these two addresses:

PSC BOX 4619
APO NY, NY Ø9286-5375

PLAZA DE SAN FRANCISCO #5
ESCALERA DERECHA, 2 DERECHA
5ØØØ6 ZARAGOZA
SPAIN

```
*********************************
*    AUDIO SPECTRUM ANALYZER    *
*     BILL GRONOS JULY 1986     *
*                               *
*MAKES A SPECTRUM COLORED WEDGE *
*AND MODULATES IT WITH SOUNDS   *
*FROM THE CASSETTE RECORDER     *
*INPUT.                         *
*********************************

        DEF RUN
        REF VWTR,VSBW,VMBW
RUN
*SET SCREEN BACKGROUND COLOR
        LI Ø,>Ø7Ø1 LOAD VDP REG 7/BLACK
        BLWP @VWTR WRITE VALUE TO REG 7

*BLANK OUT CHAR PATTERNS 96-255
        LI Ø,>8ØØ+768 PATTERN LOC FOR 96
        CLR 1
BP1     BLWP @VSBW
        INC Ø
        CI Ø,>8ØØ+768+128Ø STOP AT 255
**CHANGE 2Ø CHARACTER SETS
        JL BP1

*CHANGE SPACE CHAR TO BLACK
*TO MAKE BLACK SCREEN BACKGROUND
        LI Ø,>38Ø+4 COLOR BYTE FOR 32-39
        LI 1,>11ØØ BLACK ON BLACK
        BLWP @VSBW

*DRAW BARS
        BLWP @BARS

*DISPLAY SAMPLE OF ALL BARS
        LI 1,COLORS
        LI Ø,>38Ø+12
        LI 2,2Ø
        BLWP @VMBW

*INPUT SOUND
**INIT REG 3 WITH COLOR TABLE
**DUMMY OFFSET VALUE
        LI 3,>38Ø+11
IS1     CLR 2
IS2     TB 27 TEST CASSETTE INPUT
        JEQ IS2 WAIT FOR POLARITY CHANGE
IS3     INC 2 TIME FREQUENCY
        TB 27
        JNE IS3 QUIT ON POLARITY CHANGE
        SRL 2,1 DIVIDE TIME BY TWO
        MOV 3,Ø PREVIOUS FREQUENCY ADDRSS
        LI 1,>1ØØ LOAD FOR COLOR BLACK
        LIMI 2 ALLOW INTERUPTS
**"QUIT" KEY IS NOW ACTIVE
**DISABLE SCRN TIME OUT COUNTER
IS4     CLR @>83D6 CLR SCRN COUNTER
        TB 2 WAIT FOR VDP INTERUPT
        JNE IS4
        INC @ICOUNT
        C @ICOUNT,@IMAX
        JNE IS4
        CLR @ICOUNT
        LIMI Ø TURN OFF INTERUPTS
**"QUIT" KEY NOW INOPERATIVE
        BLWP @VSBW BLACK OUT PREV FREQ
**ACTIVATE COLOR OF NEW FREQUENCY
        MOVB @COLORS(2),1 SELECT COLOR
        MOV 2,Ø
        AI Ø,>38Ø+11 ADJUST FOR COLOR LOC
        MOV Ø,3 SAVE COLOR ADDRESS
        BLWP @VSBW TURN ON COLOR
        JMP IS1 GET NEXT FREQUENCY

IMAX    DATA 1
ICOUNT  DATA Ø
*COLORS ARE ARRANGED IN ROYGBIV ORDER.
*SINCE WE HAVE MORE ROWS THAN COLORS,
*COLORS ARE REPEATED
COLORS  BYTE 6,8,9,11,1Ø,3,2,12,7,5
        BYTE 4,13,14,15,6,8,9,11,1Ø,3

*SUBROUTINE TO DRAW COLOR WEDGE
**SET UP SUBROUTINE ADDRESS VECTORS
BARS
        DATA BARWS REGISTER WORK SPACE
        DATA $+2 SUBROUTINE ENTRY POINT
BARS1   MOV 4,5 # OF CHARS IN ROW
        MOV 3,Ø SCRN LOC OF 1ST CHR
BARS2   BLWP @VSBW
        INC Ø
        DEC 5
```

```
        JNE BARS2 JUMP UNTIL ROW IS DONE
        AI 1,>800 INCREMENT CHAR NUMBER
        INC 4 INCREMENT ROW LENGTH
        AI 3,32 INCREMENT SCREEN ADDRESS
        DEC 2 DECREMENT ROW COUNT
        JNE BARS1 JUMP FOR NEXT ROW
*PRINT HEADINGS
        LI 0,2
        LI 1,FREQS
        LI 2,6
        BLWP @VMBW
        LI 0,290
        LI 1,FREQS+6
        BLWP @VMBW
        LI 0,547
        LI 1,FREQS+12
        DEC 2
        BLWP @VMBW
        LI 0,707
        LI 1,TITLE
        LI 2,26
        BLWP @VMBW
**CHANGE LETTER COLORS TO WHITE ON BLK
        LI 0,>380+6
        LI 1,>F100
CL1     BLWP @VSBW
        INC 0
        CI 0,>380+12
        JNE CL1
        RTWP RETURN TO MAIN PROGRAM

BARWS
*INIT VALUES FOR REGS 1-4
**R1=STARTING CHAR VALUE (>60)
**R2=NUMBER OF ROWS (20)
**R3=SCRN LOCATION OF 1st ROW (9)
**R4=NUMBER OF CHARS IN 1st ROW(4)
        DATA 0,>6000,20,9,4
        BSS 22 SPACE FOR REGS 5-15
FREQS   TEXT '5000CS1000CS500CSZ'
TITLE   TEXT 'THE BILL GRONOS SOUND SHOW'
        END


*****************************************
* PROGRAM SEGMENT TO TURN SOUND         *
* ANALYZER INTO PSYCHEDELIC LIGHT SHOW*
*****************************************


*DRAW SQUARES
BARS    DATA BARWS
        DATA $+2
        LI 0,>200
        MOV 0,@IMAX INCREASE TIME DELAY
**DRAW HORZ BARS
        CLR 1
        LI 2,736
        LI 3,32
        LI 7,>6000
L1      MOV 1,4
        BL @L3
        MOV 2,4
        BL @L3
        AI 1,33
        CI 1,363 396
        JH DV
        AI 2,>FFE1 (-31)
        DECT 3
        AI 7,>800 INCREMENT CHAR
        JMP L1
*MAKE BAR
L3      AI 4,>4000
        SWPB 4
        MOVB 4,@>8C02
        SWPB 4
        MOVB 4,@>8C02
        MOV 3,6
L2      MOVB 7,@>8C00
        DEC 6
        JNE L2
        B *11
DV      CLR 6 BAR FLAG
*DRAW VERT BARS
        LI 4,32 LEFT BAR POSITION
        LI 3,22 SQUARE COUNT
        LI 1,>6000
        LI 5,33
        JMP DV2
DV3     CI 6,2
        JEQ END
        LI 4,63 RIGHT BAR POS
        LI 3,22 SQUARE COUNT
        LI 1,>6000
        LI 5,31 POS INCREMENT
DV2     MOV 4,0
        MOV 3,2
DV1     BLWP @VSBW
        AI 0,32 INC SCRN POS
        DEC 2 DEC COUNT
        JNE DV1
        A 5,4 POS OF NEXT BAR
        AI 1,>800 NEXT CHR SET
        DECT 3 DEC SQ COUNT
        JNE DV2
        INC 6
        JMP DV3
END     RTWP
BARWS   BSS 32
```

NUTS & BOLTS REVIEW

Many TI owners use Extended Basic for their program environment. It is possible to accomplish most programming tasks and to add assembly language support to XB programs.
With the power and flexibility of TI's Extended Basic, comes a non-standard syntax and statement format compared to many other forms of Basic. This makes it difficult to directly apply many of the conventions or tutorials to the programming task.
Jim Peterson of Tigercub Software has provided a solution to many of these problems. His software products include a range of hints, tips, programs, subroutines and examples of truly advanced Extended Basic programming.
Most of the Nuts & Bolts II routines are saved in "merge" format which can be called into your programs very easily. For example, you need a certain routine to say, clear the screen in a novel and esthetic manner. You simply place a statement such as CALL CLRSCRN(4,12) in your program, merge in the CALL CLRSCRN routine and bingo, you now have a routine called "CLRSCRN" in your program!. Saves countless hours.
Better yet, the program examples are worth their weight in diamonds. How many times have you been looking for a specific routine? With the Tigercub collection, hundreds of routines are at your fingertips.
Each disk contains over 100 files of advanced programming ranging from ACCEPTDUMP to ZOOP.

Jim also publishes Tips from the Tigercub which is sent to a large number of users groups in the US and Canada. Many newsletters contain program & tips listings from him - a definite asset to the TI community. Following are a few of the more recent programs. Let us know if you feel that this type of programming input is worth **supporting.**

QUAD DENSITY TI DISK CONTROLLER

Update #2. Several people have written in regarding the quad density PROM modification mentioned in issue V 1.7 some time ago.

In examining the TI disk controller manuals, it becomes obvious that TI did lay out the card & software specifications to accomodate future versions. For example, at address 004A - 004B is stored the value for number of sectors per disk. This word could hold a very large number (ie: FFFFFFFFFFFFFFFF)!!
The next byte 004C indicates the DSR version (0=nothing special, 1=version 2 DSR, 2=density & features for (new) DSR). The next byte 004D holds the drive #.
What is involved here is a change to the controlling software contained on two PROM (Programmable Read Only Memory) chips on the TI Disk Drive Controller (DDC). These are removed (they are the 24pin IC's to the left of the 40 pin IC designated FD1771) and replaced with two custom EPROMs with a new Device Service Routine.
DOS80 then allows the use of 80 tpi (track per inch) drives in the system. You can obtain 1440 sectors of information on one side of one disk.
As the TI disk controller reads the timing byte in the console operating system, the transfer of information is synchronized with the system. This is similar to the method that Myarc uses with their disk controller to get QUAD DENSITY double-sided operation from their disk controller.

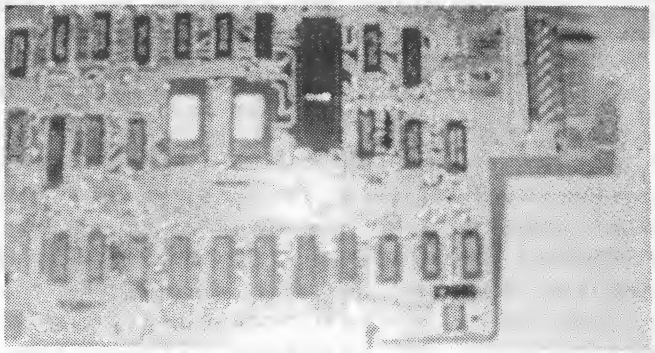

To utilize the modifications completely, Hiener Martin also wrote an EPROM based disk manager (in GPL) for DOS80 which is contained on a special EPROM card in a command module. This approach works the same as Disk Manager II with additional features.

You have to select the 80 tpi format when first accessing the drive due to the fact that the PAB software stores certain information about drives in use. To start with a 40 track disk and later request a catalogue from an 80 track disk would return errors to the system.

To make this available would involve quantities of the DSR EPROM, English translation of the DOS80 disk manager and more instructions! We need to hear from more users who would like to see this project come 'out of the lab'. In fact, if this seems worthwhile, get a friend to write us as well. We'll see what can be done.

80 COLUMN UPDATE:

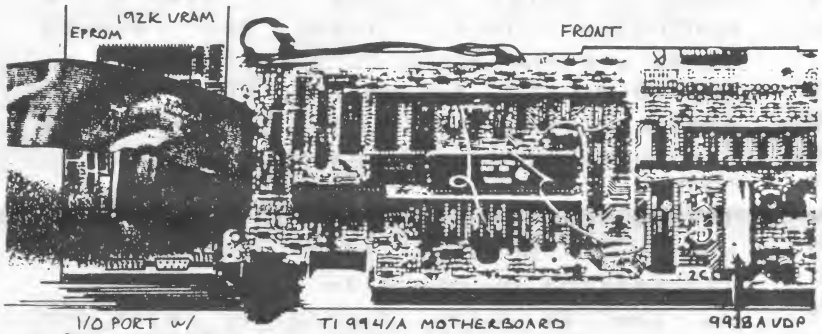

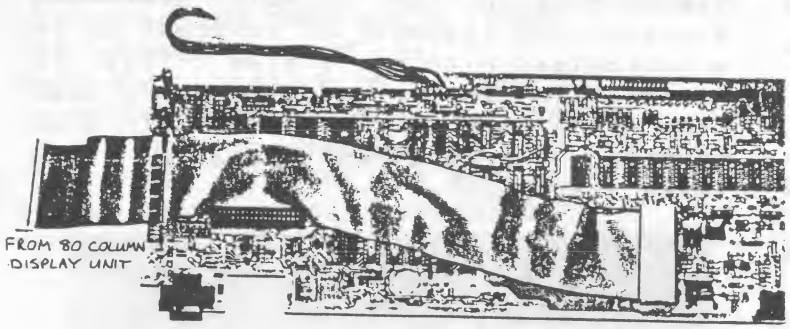

After a delay of approximately three months, Mechatronic has produced the long awaited 80 Column Display unit mentioned previously in Micropendium, Computer Shopper and R/D Computing.

Want to see your TI "grow up"? This new display will knock your socks off! 'Other' machines have had 80 column cards available for years (another benefit of open information and architecture). It's about time that the powerful 9900 in your TI 99/4A had a graphics processor which takes full advantage of the system.

This device plugs into the I/O port on the right side of the computer. A small ribbon cable goes into the console to plug into the 9918A VDP socket. The interface cable plugs into the right side of the 80 Column Display unit (80CD) . The circuit board is housed in a black metal case about 4" x 12" by 1" high. The reason this was done is that this allows ALL 4A owners to use this new graphics display board.

As noted previously, PE Box card designs have not come to fruition due to the fact that all the graphics information is not present out on the expansion bus. In our opinion, this format works just fine. The "modification" is a snap - no soldering or technical knowledge is needed. You simply open up the console and p, it's done. (If you're unsure how to accomplish the job, detailed instructions with clear diagrams are included.)

Now for all the good stuff; the 80CD is compatible with all your TI 99/4A software running in '40 column' mode. This includes modules, cassette and disk programs. The 9938 chip supports all the original 9918A commands.

We've been testing this device to the limit. New software is being written as you read this. Information has gone back to Mechatronic regarding how many should be produced before Christmas 1986.
There IS a waiting list. If you want an 80 Column Display Unit, to reach you before 1987, you must send us a firm order ASAP. Otherwise we cannot promise delivery anytime before first quarter next year.
Enough said.

[This aspect brings up some interesting questions: how much "marketing" should be performed in the pages of R/D Computing? To date, only one person has complained. Last issue contained no ads per se. This issue is the same. Except for new products being mentioned, we figure you know what is offered "ad wise".]

ATRONIC DISK CONTROLLER

We received demo units of the ATRONIC hardware mentioned in issue 1.12(.5) of the Disk Controller, RS232 and the standalone CPS99 system.

Very interesting products. I would have to give these an "A+" on all counts: quality control, ease of use, adequate documentation and adherence to TI standards.

Of particular merit is the double sided double density disk controller. This card controls up to four drives, uses all the standard TI disk drive interface specifications and does not perform strange power-up routines. It was refreshing to see a DDC that met the TI specs detailed for **their** DS/DD controller.

The card formats disks in a 9 sector format for 1440 sectors available. This is exactly twice the old SS/SD format used by Texas Instruments. To access the disk manager program (on disk) you simply enter "CALL MGR" from command mode. The disk manager then loads & runs under the on-board software contained in an EPROM. A standard DSR link routine is used - with all tracks reading & writing at the proper designated locations AND the GPL workspace address >8350 used for error messages etc.

All of the difficult software was able to load and run with the ATRONIC disk controller. Says a lot for the design work! The card uses all standard parts and cables / no surprizes there either. It appears that ATRONIC has been producing this hardware for about two years. They are not "new" to the TI market in Europe... rather they are manufacturing an entire line of both standalone and card level hardware products for the TI 99/4A.

Just for reference, we will be showing these products in Chicago. Due to the limited number of TI PE Boxes, we are considering taking trade-ins on TI disk controllers. Let us know what you think about this approach!

TIGERCUB SOFTWARE

Over 130 original entertainment, education and programming utility programs in Basic and Extended Basic on cassette or disk. Only $3.00 each! Eighteen different full-disk collections, just $12.00 each! Descriptive catalogue $1.00 refundable. TIPS FROM TIGERCUB full-disk collections of 50+ programs and files from Tigercub Tips newsletters, Vol. I, II and III $15.00 each; any two $27.00; all three $35.00 postpaid. NUTS & BOLTS (#1) and (#2) full disks of 100+ utility subroutines in XBasic 'merge' format, ready to merge into your own programs: $19.95 each, both for $37.00 with documentation, postpaid. Orders to Tigercub Software, 156 Collingwood Ave., Columbus, OH 43213

SMART MODEMS FOR ONLY:

$39.00
Completely TI compatible. Add $6 if using CorComp RS232. Modems are auto dial/answer, come with RS232 cable, manual and telephone cable. Power supply is NOT included. Power requirements are fully documented. Power supplies may be available for a short period of time. Only 50 modems to sell!

Write to: Smart Modems
14436 FENTON
REDFORD, MI 48239
USA
Send US funds for foreign equivilent. Make check or money order payable to: Scott A Sorel. If a power supply is desired add $10. Money will be refunded if quantities are sold out upon arrival of order.

WANTED: TI99/4A CONSOLES.

Have a spare console? Know anyone who would sell theirs? We only want the console - no software or peripherals needed. Will pay 50% of current, **new** replacement cost for each console. Must be in working condition.
Looking for old TI disk drives, the SS/SD variety...
Contact: Ryte Data

SUSCRIBE NOW to receive each new issue. Copies are mailed during the fourth week every month to suscribers. The data shown on each cover is for the month PAST ie: JAN 1986 is published at the end of January. Back issues are available as follows:

V 1.2 Load Interrupt Switch
E/A 8k module upgrade
V 1.3 TMS 9995 Memory map & specs
numeric keypad project & etc.
V 1.4 Extended Basic plus by Apesoft
Myarc 128k card
Auto-fire project & etc.
V 1.5 32K internal memory upgrades
DS/DD Ramdisk
Auto power-up project
V 1.6 Myarc 256k Computer
"C" Compiler
128k 'console only' memory unit
RAM/GRAM card
V 1.7 MAXIMEM review
EPROM burner
Schedule Manager review
Sense & Control card

1986 Subscription price: $14.00 US funds including First Class Delivery. Add $3 foreign

Back Issues are available to subscribers only. Price: $2.00 each. Add $1.00 postage US & Canada. Add $2.00 overseas. For Special Delivery AIRMAIL add $4.00.

R/D Computing is published monthly by Ryte Data in Haliburton, Ontario. Copyright 1985. All material contained herein is taken from sources believed to be accurate. No responsibility for errors, omissions or misprints is assumed. Articles may be reprinted with credits by users groups for publication.

Articles dealing with Texas Instruments 99/4A and 9900 based computers are published. Special attention is given to data on upgrading and modifying the 4A console & system. Information and material for consideration is solicited from owners, users groups, hardware manufacturers, software publishers etc. Please send all correspondence to Ryte Data R/D, 210 Mountain Street, Haliburton, Ont. K0M 1S0 Canada. We cannot accept responsibility for materials submitted and, unless stated otherwise, will assign all manuscripts, letters etc. for publication. ONLY Manuscripts with sufficient postage and self/addressed mailer will be returned.

In two issues (March) we are setting up a new un- classified ad section. Cheap rates at $1.25 per 40 character line. Send copy to our address with payment. Count all the characters, spaces etc. Ads will be run according to order received. Deadline date is the 21st of each month.

Ryte™ Data
BOX 210 MOUNTAIN STREET
HALIBURTON, ONTARIO K0M 1S0
CANADA